VILLA HYDRAULICS

VALVOLA DI BLOCCO PILOTATA A SEMPLICE EFFETTO

PILOT OPERATED CHECK VALVES, INTERNAL PILOT, OPERATED TYPE, SINGLE ACTING

Tipo/Type: VRP/SE/C | 1 | 09.00

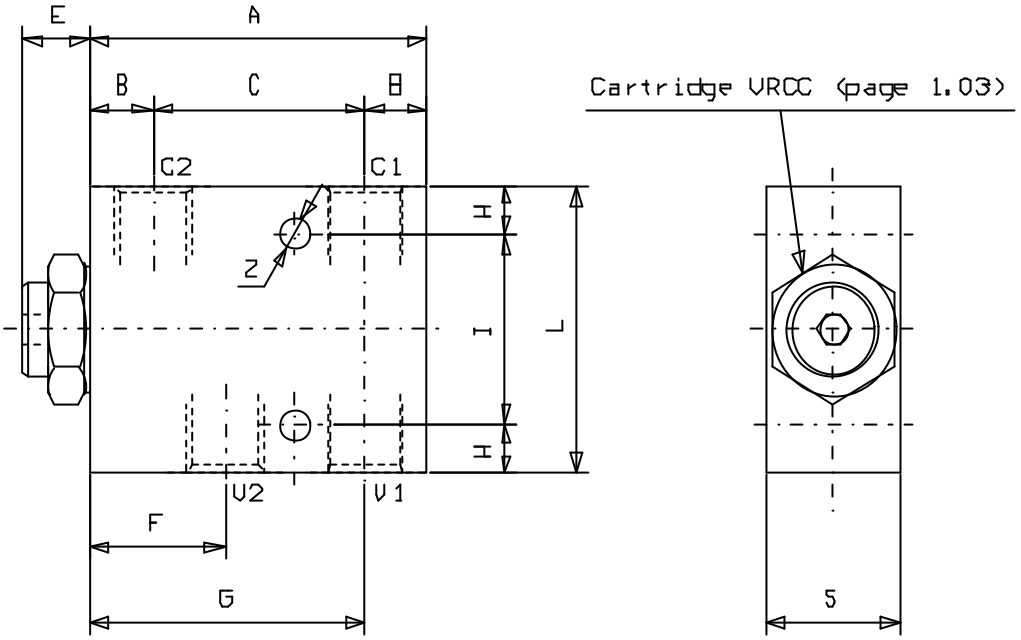

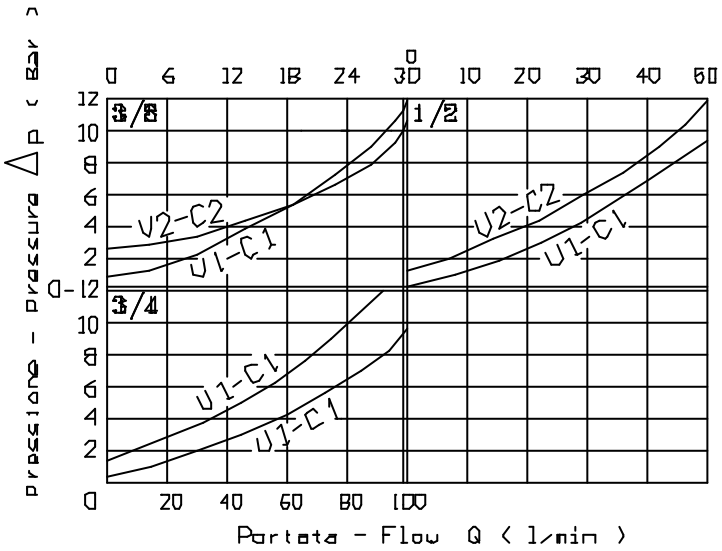

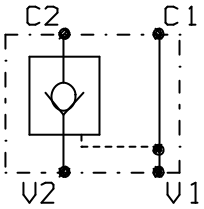

Press. max. (Bar)
350

CODICE	V1-C1 V2-C2	A	B	C	D	E	F	G	H	I	L	S	Z	Rapp. pilot.
VRP/SE/C 38	G 3/8	75	14	47	14	15	30	45	10	40	60	30	6.5	7.1:1
VRP/SE/C 120	G 1/2	95	20.5	55.5	19	15	38	55	15	40	70	35	8.5	3.2:1
VRP/SE/C 340	G 3/4	135	30	83	22	28	57.5	80	20	50	90	45	10.5	4:1