VILLA HYDRAULICS

VALVOLA DI BLOCCO PILOTATA SEMPLICE EFFETTO FLANGIABILE

PILOT OPERATED CHECK VALVES, INTERNAL PILOT, OPERATED TYPE, SINGLE ACTING, FACE MOUNTING

Tipo/Type:	VRP/SE/FL	1	10.00

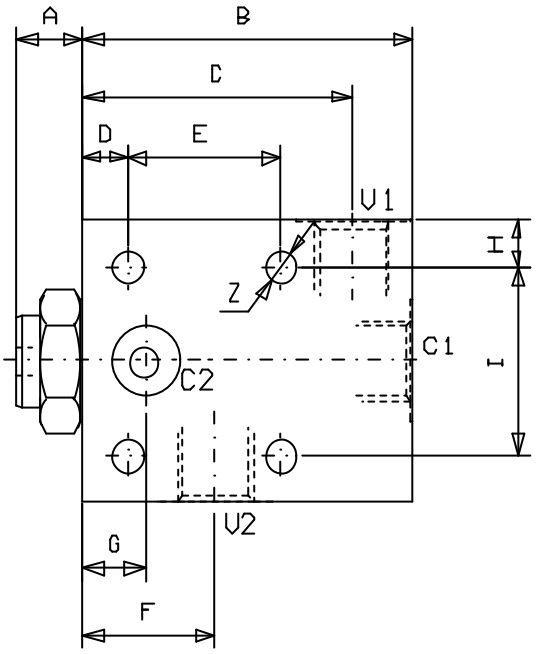

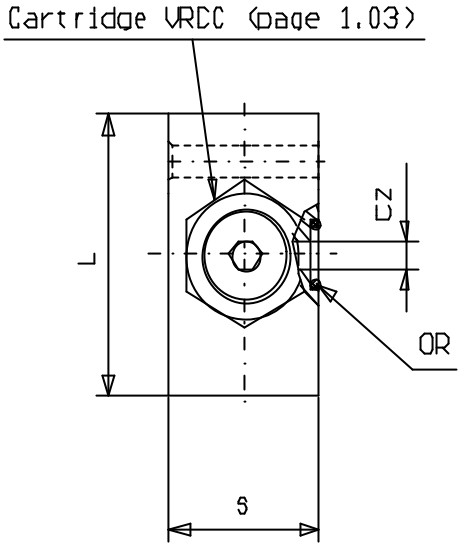

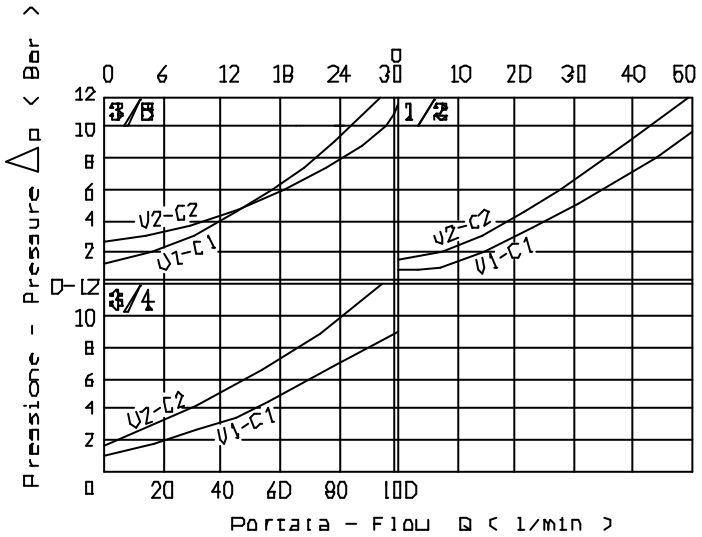

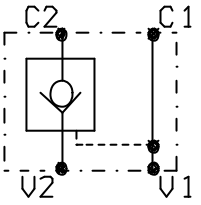

Press. max. (Bar)
350

CODICE	V1-C1 V2	C2	OR	A	B	C	D	E	F	G	H	I	L	S	Z	Rapp. pilot.
VRP/SE/FL 38	G 3/8	6	3037	15	75	61	10	35	29	14	10	40	60	34	6.5	7.1:1
VRP/SE/FL 120	G 1/2	7	3062	15	95	76	15	40	38	20.5	15	40	70	34	8.5	3.2:1
VRP/SE/FL 340	G 3/4	14	4075	28	135	113	15	65	57.5	30	20	50	90	49	10.5	4:1