VILLA HYDRAULICS

VALVOLA DI BLOCCO PILOTATA SEMPLICE EFFETTO FLANGIABILE

PILOT OPERATED CHECK VALVES, INTERNAL PILOT, OPERATED TYPE, SINGLE ACTING, FACE MOUNTING

Tipo/Type:	VRP/SE/FL/B	1	10.01

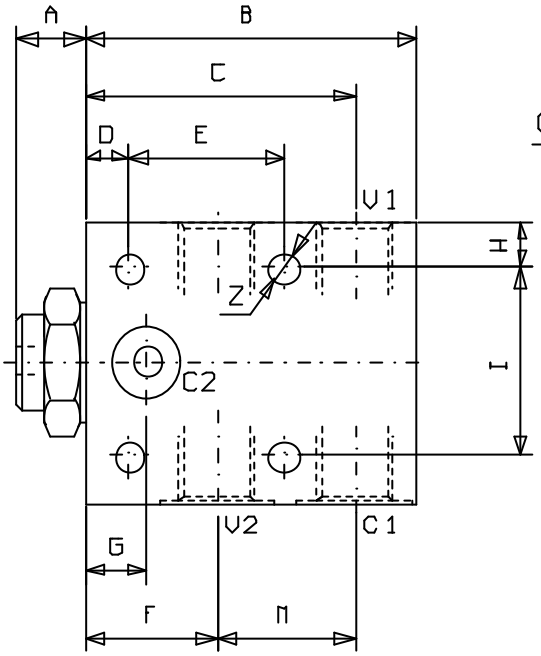

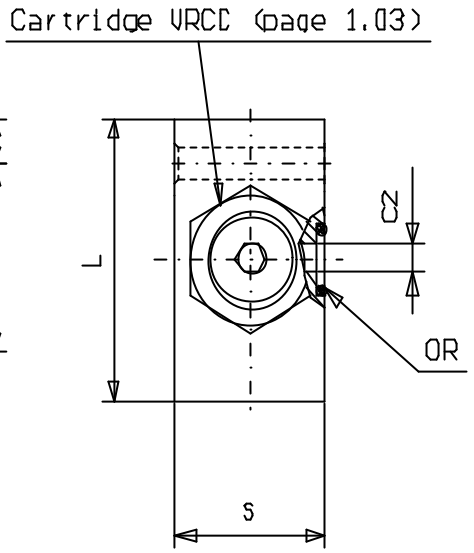

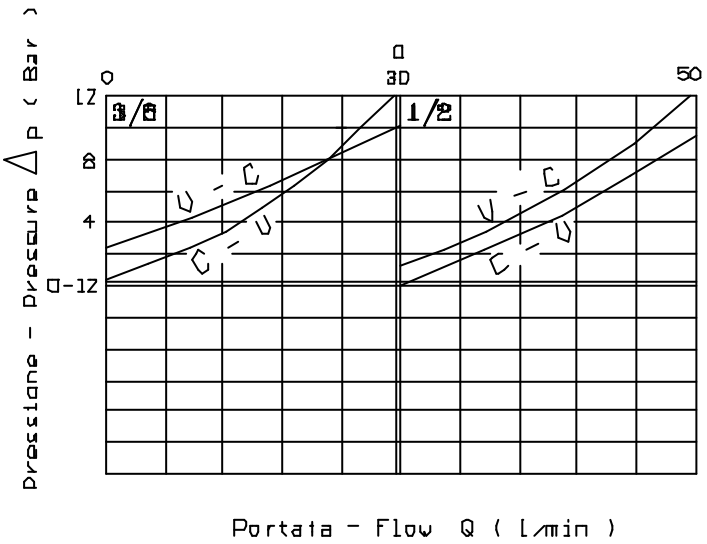

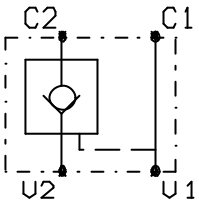

Press. max. (Bar)
350

CODICE	V1-C1 V2	C2	OR	A	B	C	D	E	F	G	H	I	L	M	S	Z	Rapp. pilot.
VRP/SE/FL/B 38	G 3/8	6	3037	15	75	61	10	35	29	14	10	40	60	32	34	6.5	7.1:1
VRP/SE/FL/B 120	G 1/2	10	3062	14	95	76	15	40	38	22.5	15	40	70	38	34	8.5	3.2:1