VILLA HYDRAULICS

VALVOLA DI BLOCCO PILOTATA SEMPLICE EFFETTO FLANGIATA CON RUBINETTO (DESTRA)

PILOT OPERATED CHECK VALVES, INTERNAL PILOT, OPERATED TYPE, SINGLE ACTING, FACE MOUNTING, WITH MANUAL LEVER CONTROL (RH)

Tipo/Type:	VUPR/FL/D 38	1	18.00

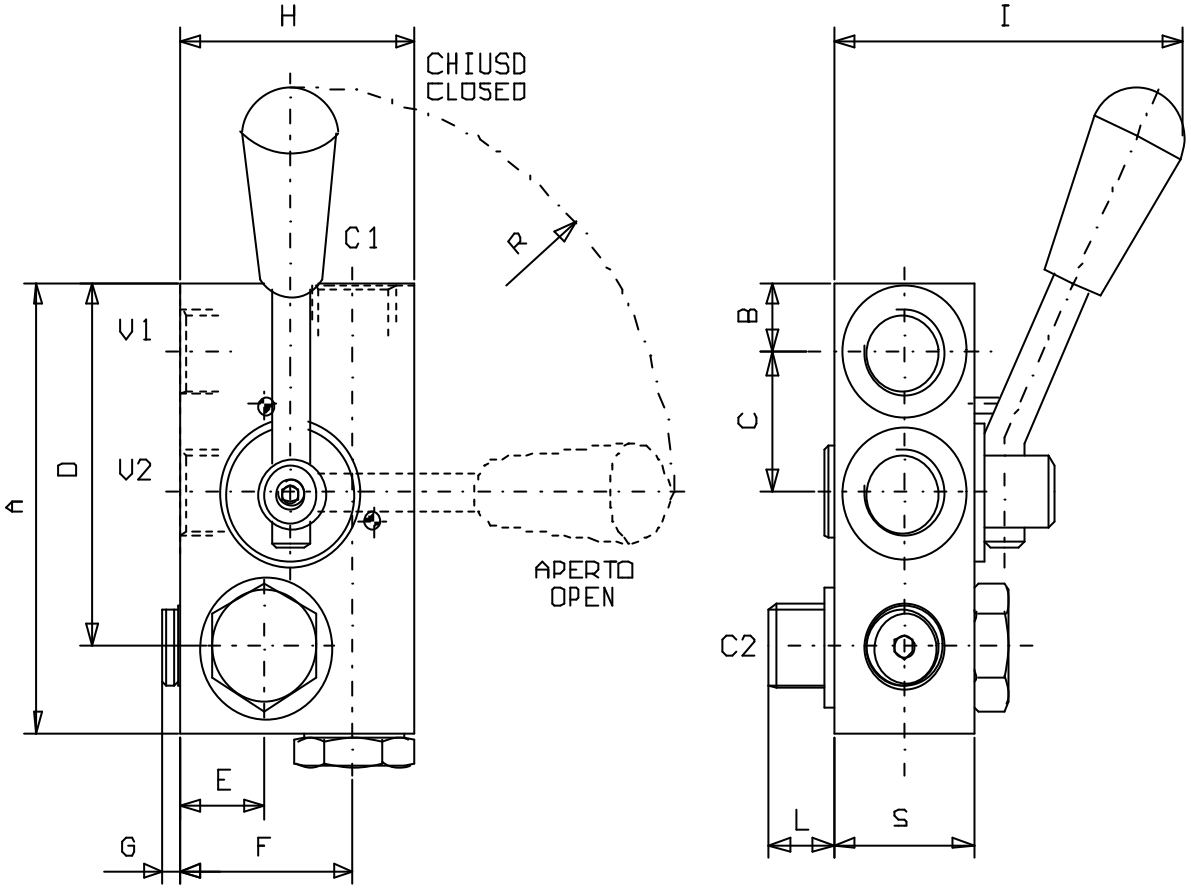

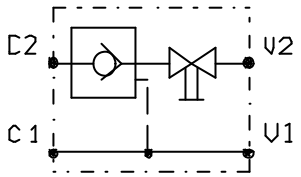

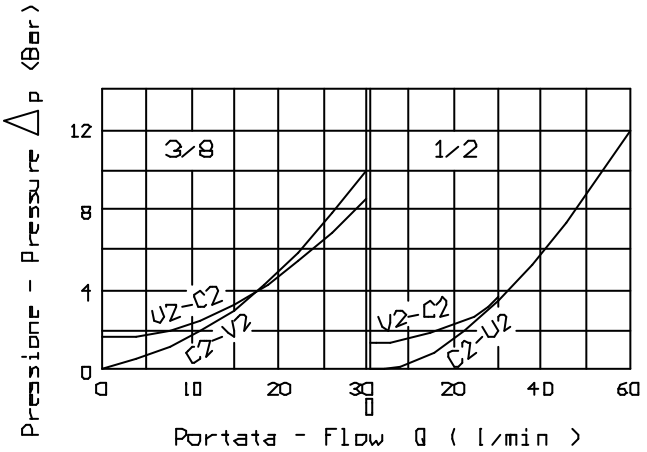

Press. max. (Bar)
350

Press. Apert. (Bar)
0.5

CODICE	V1-C1 V2-C2	A	B	C	D	E	F	G	H	I	L	R	S	Rapp. Pilot.
VUPR/FL/D 38	G 3/8	90	14	28	72.5	18	37	3	50	75	13.5	81	30	3:1
VUPR/FL/D 120	G 1/2	90	15	35	73	25	50	-	65	77	18	81	35	3:1