VILLA HYDRAULICS

VALVOLA DI BLOCCO PILOTATA DOPPIO EFFETTO IN LINEA

PILOT OPERATED CHECK VALVES,INTERNAL PILOT,OPERATED TYPE,DOUBLE ACTING, LINE MOUNTING

Tipo/Type:	OVRPDL	1	20.00

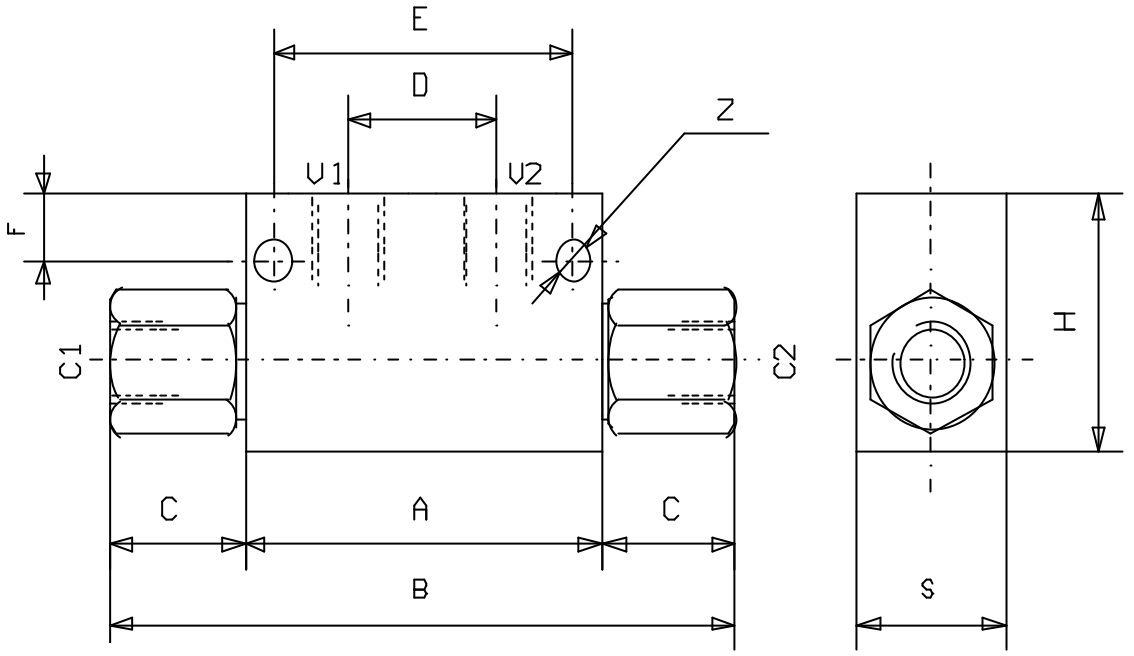

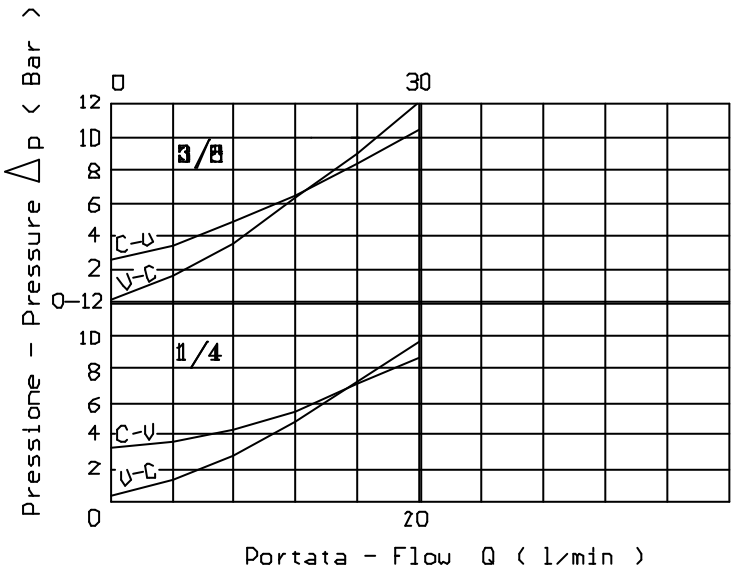

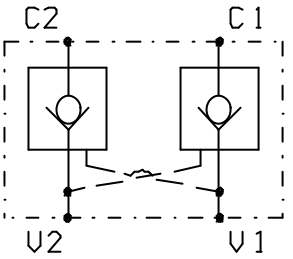

Press. max (Bar)
350

CODICE	V1 - C1 V2 - C2	A	B	C	D	E	F	H	S	Z	Rapp. pilot.
OVRPDL 14	G 1/4	60	104	22	25	50	10	40	25	5.5	4.7:1
OVRPDL 38	G 3/8	77	144	33.5	32.5	62	12	50	30	6.5	4:1