VILLA HYDRAULICS

VALVOLA DI BLOCCO PILOTATA DOPPIO EFFETTO IN LINEA ED ATTACCHI CONTRAPPOSTI

PILOT OPERATED CHECK VALVES, INTERNAL PILOT, OPERATED TYPE, DOUBLE ACTING, LINE MOUNTING, THROUGH PORTED

Tipo/Type:	VRPD/C	1	22.00

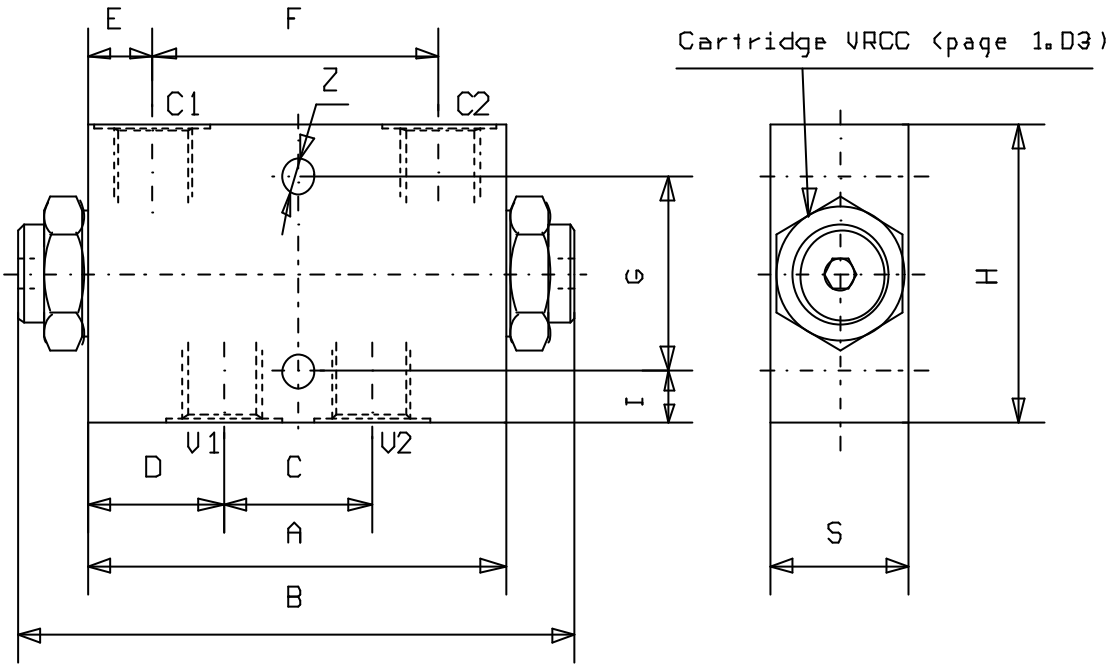

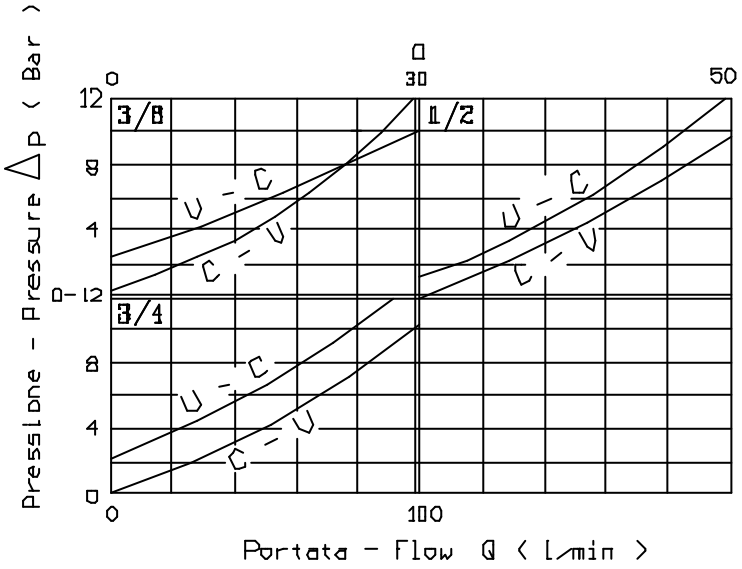

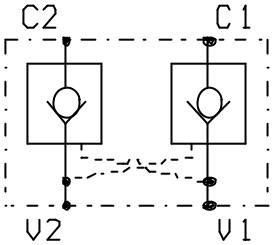

Press. max. (Bar)
350

CODICE	V1-C1 V2-C2	A	B	C	D	E	F	G	H	I	S	Z	Rapp. pilot.
VRPD/C 30	G 3/8	90	120	32	29	14	62	40	60	10	30	6.5	7.1:1
VRPD/C 120	G 1/2	110	140	34	38	20.5	69	40	70	15	35	8.5	3.2:1
VRPD/C 340	G 3/4	165	220	50	57.5	30	105	60	90	15	50	8.5	4:1