VILLA HYDRAULICS

VALVOLA SELETTRICE FLANGIABILE SU MOTORI DANFOSS OMT

SHUTTLE VALVE, FACE MOUNTING, FOR DANFOSS MOTORS OMT

Tipo/Type:	VSL/FL/OMT 340	7	02.34

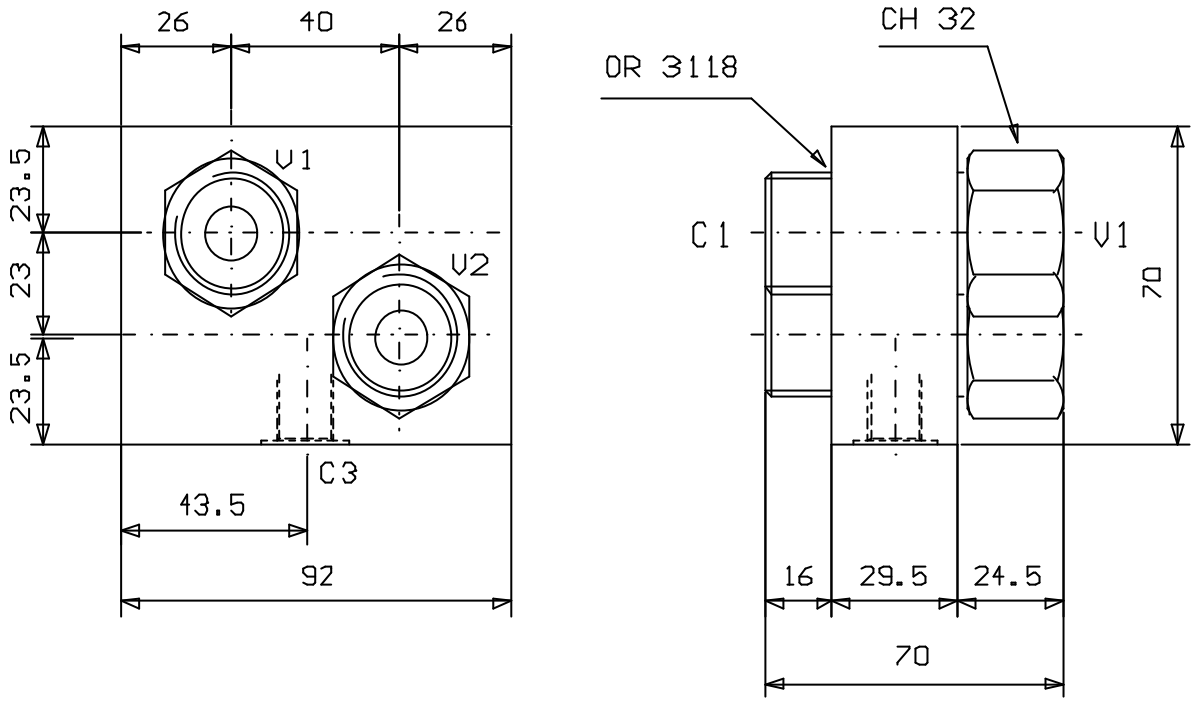

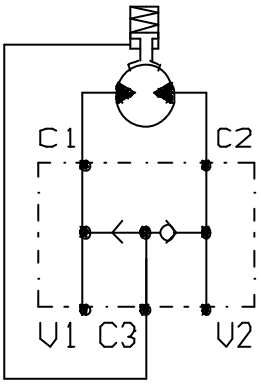

ATTACCHI	
V1 - V2	G 3/4
C1 - C2	
C3	G 1/4

Press. max. (Bar)
250

Portata max. (l/min)
100