VILLA HYDRAULICS

VALVOLA SELETTRICE FLANGIABILE SU MOTORI OILDRIVE MGL,MGLR,MGT

SHUTTLE VALVE, FACE MOUNTING
FOR OIDRIVE MOTORS MGL, MGLR, MGT

Tipo/Type:	VSL/FL/MGL 120	7	30.00

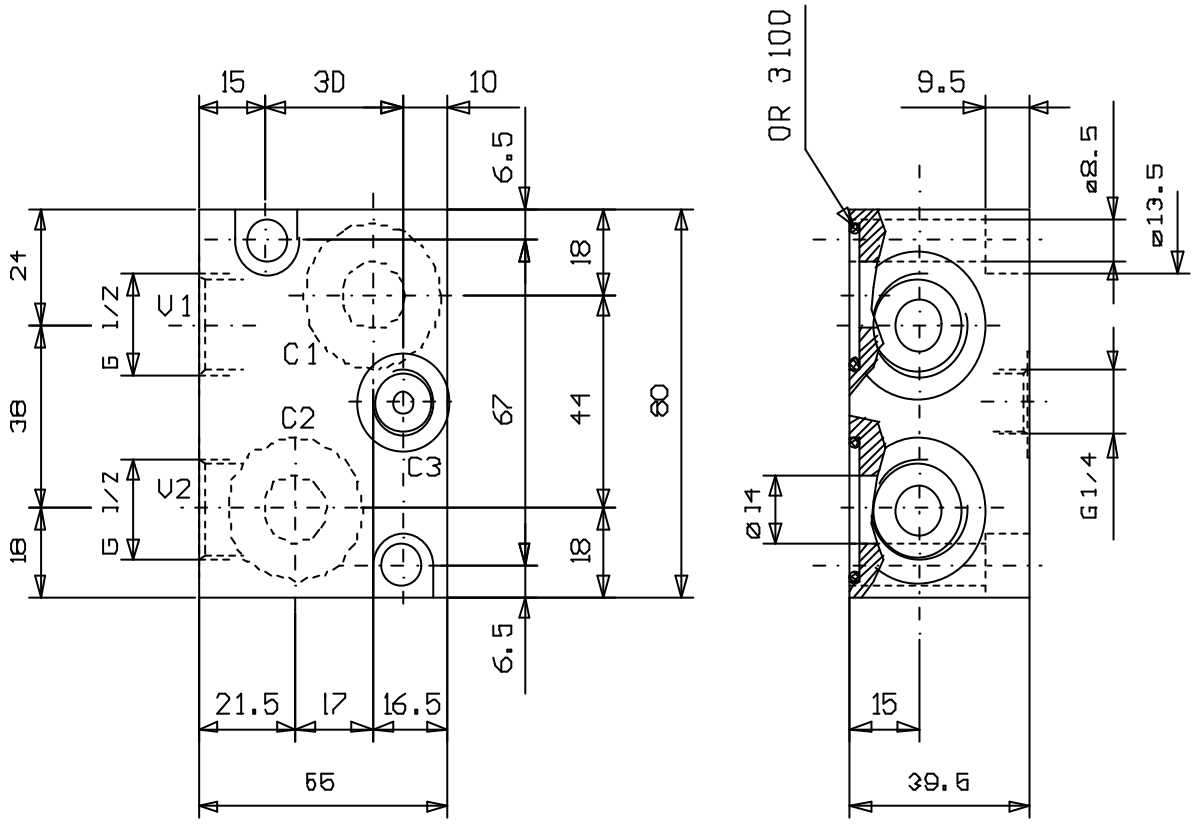

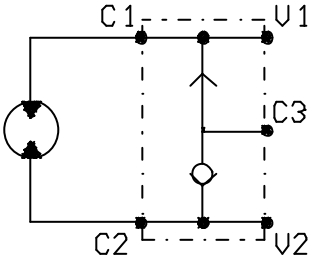

Press. max. (Bar)
350

Portata max. (l/min)
50